European Committee for Standardization
Comité Européen de Normalisation
Europäisches Komitee für Normung

CEN/WS/BII06

BII04 – Invoice Only

PROFILE

DRAFT

Business Domain: Post award procurement

Business Process: Procurement

Document Identification: CEN/WS/BII2/Profile BII04

Version: 2.0

Release: 2012-06-27

Date of approval:

Document Summary

This profile describes a process comprising only a supplier initiated electronic Invoice. It is intended to support use cases where the invoicing is electronic but where automation of matching it to other documents is not required. The Invoice is a self-contained document with respect to commercial and fiscal requirements.

It is not a primary objective of this profile to facilitate automatic order matching and/or cost allocation; the profile assumes limited or no procurement data content and limited or no aligned and synchronized identifiers in the system to match the transaction.

This profile may cover Invoice factoring arrangements but is not designed for self billing.

Editors

- Oriol Bausà Peris
- Georg Birgisson
- Fred van Blommestein
- Arofan Gregory
- Anders Kingstedt

Contributors

CEN/ISSS WS/BII2 Post Award Working group:

- Bergthor Skulason (chair)
- Antonia Caressa, Consip S.p.A., IT
- Arianna Brutti, Enea, IT
- Bao Nguyen, Difi, NO
- Douglas Hill, GS1, DK
- Flemming Moller Hansen, Evenex, DK
- Jan Bo Sørensen, Evenex, DK
- Jan Mærøe, DIFI, NO
- Jaroslav Fleijberk, GS1, CZ
- Joao Frade, PWC/EC, EU
- Jostein Frømyr, EDISYS, NO
- Klaus Vilstrup Pedersen, Difi, NO
- Martin Forsberg, SFTI, SE
- Michael Dill, Gefeg, DE
- Nicoletta Lippi, Consip S.p.A., IT
- Peter Borresen, ebConnect, DK
- Sören Lennartsson, SFTI, SE
- Sven Rasmussen, NITA, DK
- Veit Jahns, University of Duisburg-Essen, DE

Table of Contents

1 Introduction 4
1.1 CEN WS/BII2 profiles 4
1.2 CEN WS/BII2 Post award support 5
1.3 Implementation, conformance and customization 6

2 Business environment 8
2.1 Introduction 8
2.2 Objectives 8
2.3 Scope 8

3 Requirements 9
3.1 Invoicing Process requirements 9
3.1.1 Support of common business process 9
3.2 Invoicing information requirements 10
3.2.1 Invoice transaction business requirements 10

4 Profile detailed description 15
4.1 Business processes in scope 15
4.2 Roles involved 15
4.3 Billing Business Process 17
4.4 Transaction information requirements 17
4.4.1 Invoice Transaction 17

5 Implementation 35

6 References 36
6.1 General references relevant for all BII profiles 36

1 Introduction

This profile is a deliverable of the CEN ISSS BII2 workshop.

The original CEN Workshop on **Business Interoperability Interfaces for public procurement in Europe** (CEN ISSS BII) was concluded in December 2009, and its results, including a set of profiles, were issued as **CWA 16073:2010**. The objective of the second phase of the workshop – CEN WS/BII2 – was to provide a framework for interoperability in pan-European electronic procurement transactions, expressed as a set of requirements and technical specifications. The requirements are input into UN/CEFACT and the specifications are compatible with UN/CEFACT in order to ensure global interoperability.

Based on user input the CEN WS/BII2 has issued a number of new profiles and reviewed and updated a number of the profiles published as part of CWA 16073:2010. One of the updated profiles is profile BII04 that describes the invoicing process. This version 2 of BII04 – Invoice Only is an updated version of the original BII04 profile. The update is not strictly upward compatible. See the BII document on Versioning and Change Management Policy for definition of upward compatibility in BII workshop documents.

1.1 CEN WS/BII2 profiles

A CEN WS/BII2 profile description is a technical specification describing

- the choreography of the business process covered, i.e. a detailed description of the way the business partners collaborate to play their respective roles and share responsibilities to achieve mutually agreed goals with the support of their respective information systems,
- the electronic business transactions exchanged as part of the business process, with their information requirements, and the sequence in which these transactions are exchanged,
- the business rules governing the execution of that business process, as well as any constraints on information elements used in the transaction data models

The profiles focus on the standardization on the organisational and semantics interoperability levels rather than on syntax or technical interoperability levels. Consequently the business transactions within a profile can be structured based on different message standards/syntax as long it can carry all the necessary information elements.

Although the profile descriptions and transaction data models provided by CEN WS/BII2 are neutral of syntax, the workshop also published specifications of how its data models may be mapped to defined syntaxes. This is done in order provide implementable specifications.

The main focus of the profile description and the associated transaction data models is to address generally expressed business requirements, applicable throughout the European market. Although the profile description is designed to meet generally expressed requirements, it is still the responsibility of the users to ensure that the actual business transactions exchanges meets all the legal, fiscal and commercial requirements relevant to their business.

BII profiles describe common business processes. Stating what business practices are “common” depends on regions and industries that may have their own practices and needs, as well as on work practices within individual companies. Describing what business processes are “common” is therefore a qualitative process. This section sets out to identify what business practices can be listed as “common” and should therefore be supported by the profile. The benchmark is that the common business process is a process that is used by a wide range of companies in different industries and regions or is generally recognized as being relevant for most companies. The method for collecting is through input and expert advice from workshop participants, through existing documentation and expert review.

Each document acts as carrier of information between a seller and a buyer. Some of this information is directly related to its core function but additionally and frequently contains information that is used for

related business processes. The nature of which and details depend on the industry and bilateral business relations.

In BII profiles, requirements of the information content of the documents are related to the business process in which the documents are exchanged. The business process in scope of the profile is identified in section 2. In section 3, the business requirements, taken into account, are listed, both on process level and on document/transaction level. In section 4, these requirements are modelled into UML activity diagrams and into Transaction Information Requirement models. Additional Transaction Business Rules are included in section 4 as well.

The requirement models are syntax neutral. The mapping of the models to available syntaxes is outside the scope of the profiles, but is referenced to in section 5.

1.2 CEN WS/BII2 Post award support

The BII workshop has developed a set of profiles to support interoperability in the pre and post award areas. The scope of BII2 is public procurement but the profiles apply as well to private trade since most public trade involves private suppliers.

The scope of BII2 post award profiles include processes that support communication of catalogues, orders and invoices. These may link with other support processes like transport, inventory and payment, but these other processes are currently out of scope for the workshop.

The set of BII profiles for supporting the post award area are:

Profile		*Processes*	*Transactions*	*Version*
BII33	Catalogue subscription	Sourcing	Catalogue Subscription Request Catalogue Subscription Request Acceptance Catalogue Subscription Request Rejection	BII2
BII01	Catalogue only	Sourcing	Submit Catalogue Accept Catalogue Reject Catalogue	BII2
BII17	Multi Party Catalogue	Sourcing	Catalogue Request Catalogue Request Rejection Multiparty Catalogue	BII2
BII02	Catalogue update	Sourcing	Submit Catalogue Item Update Submit Catalogue Price Update Accept Catalogue Update Reject Catalogue Update	BII2
BII16	Catalogue Deletion	Sourcing	Catalogue Deletion Request Catalogue Deletion Confirmation	BII2
BII20	Customer Initiated Sourcing	Sourcing	Request Quote Provide Quote Reject Quote	BII1
BII03	Order only	Ordering	Order Submission	BII2
BII28	Simple ordering	Ordering	Order Submission Order Acceptance Order Rejection Seller Counter Offer	BII2
BII18	Punch Out	Ordering	Provide Quote	BII1
BII27	Advanced ordering	Ordering	Order Submission Order Acceptance Order Rejection Seller Counter Offer Buyer Counter Offer Counter Offer Acceptance Order Withdrawal	BII2
BII04	**Invoice Only**	**Billing**	**Invoice**	**BII2**
BII15	Scanned invoice	Billing	Submit Invoice Correct with Credit Request Rescan	BII1
BII09	Customs Bill	Billing	Submit Invoice Correct with Debit Correct with Credit	BII1
BII05	Billing	Billing	Invoice Credit Note Corrective Invoice	BII2

BII23	Invoice only with dispute	Billing	Submit Invoice Dispute Invoice	BII1
BII06	Procurement	Ordering, Billing	Order Submission Order Acceptance Order Rejection Invoice Credit Note Corrective Invoice	BII2
BII07	Procurement with invoice dispute	Ordering, Billing	Submit Order Accept Order Reject Order Submit invoice Dispute Invoice Correct with Invoice Correct with Credit	BII1
BII31	Reminder only	Payment	Payment Reminder	BII2
BII21	Statement	Payment	Statement Statement Rejection	BII2
BII08	Billing with dispute and reminder	Billing, Payment	Submit Invoice Dispute Invoice Correct with Invoice Correct with Credit Issue Reminder	BII1
BII19	Advanced Procurement	Ordering, Billing, Payment	Submit Order Accept Order Reject Order Submit Counter Offer Accept Counter Offer Reject Counter Offer Submit invoice Dispute Invoice Correct with Invoice Correct with Credit Issue Reminder	BII1
BII30	Despatch only	Fulfilment	Despatch Advice	BII2
BII29	Utility statement	Fulfilment	Utility Statement Utility Statement Acceptance Utility Statement Rejection	BII2
BII13	Advanced Procurement with Dispatch	Ordering, Fulfilment, Billing, Payment	Submit Order Accept Order Reject Order Submit Counter Offer Accept Counter Offer Reject Counter Offer Provide Despatch Advice Submit invoice Dispute Invoice Correct with Invoice Correct with Credit Issue Reminder	BII1

This profile BII04-Invoice Only supports only the exchange of invoices. If Credit Notes are to be exchanges, or if an invoice is to be corrected, profile BII055-Billing is to be used. Profile BII05-Billing includes invoicing, sending credit notes and correcting invoices by means of credit notes and corrective invoices. Notification of an invoice dispute is handled in BII05 by off line communication. If such notification is to be structured, other profiles are to be used, such as BII23-Invoice only with Dispute or BII07-Procurement with Invoice Dispute. Payment reminding is also out of scope of this profile; profile BII31-Reminder Only and profile BII08- Billing with dispute and reminder include payment reminding.

For sourcing, ordering and fulfilment select an applicable profile from the table above.

1.3 Implementation, conformance and customization

CEN WS/BII2 profiles define the core functionality that is required in order to achieve interoperability for the business processes that are covered. Parties, claiming conformance to a CEN WS/BII2 profile must be capable of:

- Processing all non-optional transactions that are defined in the profile

- Sending all mandatory elements within the transactions
- Processing all elements within the transactions they receive

Parties may agree bilaterally or within certain communities to extend the core set of information elements, or to adapt their cardinality. This extension mechanism is described in the BII Technical Guideline: BII conformance and customization, which is annexed to CEN CWAxxxx0.

In order to implement a profile, the transactions are to be represented in some syntax. Syntax representation is outside the scope of the profiles; however, the mapping of the profile transactions to UBL 2.0 and to UN/CEFACT has been described. In the profiles, reference is made to technical documents such as XML schemas, Schematron files and example messages to support technical implementation.

Implementations of the profiles may be validated by means of tools and supporting material, as described in the BII Technical Guideline: BII implementation and use of validation artefacts, annexed to CEN CWAxxxx0. More background information and support material can be found on the CEN WS/BII2 website http://www.cenbii.eu/.

2 Business environment

2.1 Introduction

The BII04 – Invoice Only profile supports the exchange of an invoice. It describes a series of activities that govern communication between the parties, data and rules that apply.

2.2 Objectives

The business objectives for implementing this profile are:

1. The profile is a basis for an EDI agreement between the parties and enables trading partners to communicate without a previous bi-lateral setup or agreements.
2. Is a basis for automated handing of invoices in a semi manual environment.
3. Enables customers to set up a standardized billing process.
4. SME can offer their trading partners the option of exchanging standardized documents in a uniform way and thereby move all invoices into electronic form.
5. Can be used as basis for restructuring of in-house processes of invoices.
6. Significant saving can be realized by the procuring agency by automating and streamlining in-house processing. The accounting can be automated significantly, approval processes simplified and streamlined, payment scheduled timely and auditing automated.
7. Significant saving can be realized by the suppliers by automating and streamlining in-house processing: invoicing can be improved significantly based on shorter payment cycles.

2.3 Scope

This profiles supports a process of linking ordering with invoicing. It is intended to support transmission of electronic documents for processing in semi automated processes by the receiver. The profile mandates use of references in the invoice to the ordering process. The only legal requirements that were taken into account are however requirements from European legislation, in particular the VAT EU directive 2006/112.The intended scope for this profile includes:

- B2B and B2G
- Common business processes for cross industry and cross border invoicing
- Regional procurement within EU and EEA. The profile is expected to be applicable to other regions following a review of regional requirements.
- Mainly for purchase of goods and services and/or services that can be itemized.
- To enable both VAT and non VAT invoicing

The transactions, specified in this profile are intended to be exchanged between the application systems of customers and suppliers. This means that it is expected that customers and suppliers have connected their systems to the internet, and that they have middleware in place to enable them to send and receive the transactions in a secure way, using an agreed syntax.

3 Requirements

3.1 Invoicing Process requirements

The Invoicing process includes the sending of Invoices. An Invoice claims the payment for the delivery of an Order. This profile supports a set of "common business process" that are used widely or understood as being relevant for most companies.

- The Supplier as a Creditor sends an electronic Invoice.
- The Customer as a Debtor may accept the invoice (and pay it), in which case the process ends.
- The customer may dispute the invoice, but dispute notification and resolution are outside the scope of this profile.
- The invoice may contain instructions for payment but the payment process is out of scope.

3.1.1 Support of common business process

This section identifies the major business processes that are frequently supported within billing and will clarify if and how they are supported in this profile.

Accounting
Booking an invoice into the company account is one of the main objectives of the invoice. An Invoice must provide for information at document and line level that enables booking both the debit and the credit side.

Invoice verification
Support for invoice verification is a key function of an invoice. An invoice should provide sufficient information for looking up relevant existing documentation, including:

- Preceding orders.
- Contracts.
- Buyer's reference.
- Receipts of goods or services.

An Invoice should also contain information that allows the transfer of the received invoice to a responsible person or department for verification and approval. For this purpose the following information should be provided in a Core Invoice.

- Identification of the responsible person or department.

VAT reporting
Core invoices should provide support for the determination of the VAT regime and the calculation and reporting thereof in accordance with the EU directive 2006/112/EC as amended up to August 31st 2011 (including EU directive 2010/45/EU) for sales and purchase invoices, that are identified in the scope of this project, and should provide necessary elements for national legal VAT requirements that apply for invoices issued to national and foreign buyers. Core Invoices should support for the following VAT use cases:

- Invoices for supplies for which VAT is charged.
- Invoices for supplies for which VAT is not charged based on an exemption reason.
- Invoices for supplies that are issued under reverse charge (article 194 to 199).
- Invoices for exempt intra-community supplies for which an intra-community acquisition must be done (article 200)
- Invoices for supplies outside the scope of the Directive 2006/112/EC (non-VAT invoices).

Auditing
Invoices support the auditing process by providing sufficient information for the following

- Identification of the relevant parties.
- Identification of the product and services traded, including description, value and quantity.
- Information for connecting the invoice to its settlement.
- Information for connecting the invoice to relevant documents such as contracts and orders.

Payment
Invoices should identify the means of settlement for an invoice and clearly state what payment is requested. They should provide necessary details to support bank transfers in accordance with the SEPA initiative. They may provide information for relating an invoice to a payment card used for settlement. Additionally Core Invoices should support basic information for national payment systems for use in domestic trade.

Direct debits, in accordance with SEPA initiative, are out of scope for core invoices since the use of directs debit are dependant on prior contractual agreement between the buyer and the seller.

Inventory

Support for inventory management is not in scope for Core Invoices although it is recognized that information required by other processes, supported in the Core Invoice, may be used for putting goods into inventory.

Delivery process

Support for the delivery process is not in scope for Core Invoices and the use of other appropriate electronic documents is recommended.

Customs clearance

Core Invoices are not intended to specifically support customs clearance in general although information required by other processes supported in the Core Invoice may be used for customs purposes.

Marketing

No specific marketing information is within scope of the Core Invoice. .

Reporting

No specific reporting information is within scope of the Core Invoice itself but such information can be provided with attachments.

3.2 Invoicing information requirements

3.2.1 Invoice transaction business requirements

General requirements

ID	Requirement
tbr10-001	To control the validation and processing of an invoice; information that identifies the data model customization used and the business process that the invoice is part of.
tbr10-003	The Invoice must support information that is in line with the document purpose as a control document that enables the buyer to operate a process where the invoice is reviewed and accepted or rejected by comparing it to existing information. Functions in scope include: “order to invoice matching“ and “contract reference”; as well as referencing to: project codes, responsible employees and other information.
tbr10-004	It must be possible to include attachments with the invoice for example to provide timesheets, usage reports or other relevant information for reviewing the invoice.
tbr10-029	Comments, clauses, statements (e.g. of country of origin) and notes at invoice and line level must be supported in the Invoice. It is recognized that when issuing invoices there may be different needs to state information that does not have qualified elements and is not necessarily intended for automatic processing. Examples may be references to buyer’s special purchasing codes, remarks regarding deviation in delivery or other

ID	Requirement
	issues that may be of importance. Since the Invoice must not require an electronic interchange agreement between the buyer and seller the Invoice provides flexibility by supporting textual notes at document and line level.
tbr10-043	The Invoice, Corrective Invoice and Credit Note content enables the Customer's system to route the document to a specific person, department or unit within the organization for authorization or other tasks.
tbr10-048	The Invoice information must be self-sufficient. E.g. party and product information must be given in detail in the invoice and any party and product identifiers provided are only informative.

Parties

ID	Requirement
tbr10-005	Party and item identifiers. Use of published identifiers is common for identifying parties or products. Parties should be free to choose the identification scheme.
tbr10-007	An Invoice must support information that facilitates the review of the invoice by: transferring it to the relevant location within the receiving company and to enable the invoice buyer to contact the seller for clarifications. Information items that must be are supported in the Invoice are: contact names, contacting details, departments.
tbr10-016	As well as being common business practice it is a legal requirement (both in EU directives and national laws) to include address information for the seller and the buyer in an invoice. Exactly what address details are required is however not defined in these legal requirements and common practices are different. It also differs between countries whether location identifiers are allowed for this purpose. For the purpose of interoperability the Invoice must support the following basic address information: - Street name (two lines) and building number or P.O. Box. - City name and postal code - Region - Country
tbr10-018	An Invoice must support delivery address information and identifier in order to enable the buyer to identify where the invoiced items were delivered, for controlling purposes.
tbr10-037	The Invoice must support information about the parties' electronic address, as part of party information.

Accounting and payment

ID	Requirement
tbr10-008	For automating the booking of invoices into the buyers account the invoice must support the relevant accounting code or project cost codes.
tbr10-009	Invoices commonly contain information on how they should be paid. There are multiple ways of settling invoices but the Invoice must support international bank transfers according to the SEPA specification by supporting information about a bank account IBAN id and the financial institution BIC code.
tbr10-010	The invoice issuer must be able to include a payment reference in the invoice and request the payer to use that reference in the payment initiation message. This enables automation of payment-to-invoice matching when reconciling account statements.
tbr10-011	Invoices commonly have payment terms such as penalty charges if not paid on due date. The Invoice must support such information in unstructured form.
tbr10-030	It is recognized that in some countries within Europe financial institutions may be identified with branch identifiers rather than financial institution identifiers. It is also

ID	Requirement
	recognized that in such cases the accounts id used may be proprietary, i.e. not IBAN.
tbr10-031	Invoices may be paid with payments cards (e.g. online purchases) in which case it is of benefit for the payer to identify what payment card was used so that he can more easily reconcile the invoice against the payment card statements.
tbr10-032	Invoices represent a claim for payment and the invoice may have to state the due date for the payment when that is not defined in contracts between the buyer and seller.
tbr10-042	The Invoice, Corrective Invoice and Credit Note content facilitates automatic validation of legal and tax values, tax accounting and payment
tbr10-044	Payment means and terms stated at document level must apply to all invoice lines.
tbr10-045	Stated pre-payments apply to the invoice as a whole.
tbr10-046	Accounting details stated at document level must apply to all invoice lines.
tbr10-047	Tax information stated at document level must apply to all invoice lines.

Line Items

ID	Requirement
tbr10-002	Line identifiers are needed to enable referencing Invoice lines from other documents.
tbr10-006	It is a common business practice that sellers identify their items with registered product numbers. This number identifier is commonly used for cross-referencing information in other documents such as catalogues, orders and offers. The term ‘product number’ is also commonly used to describe alphanumeric string identifiers. Both numeric and alphanumeric string identifiers must be supported.
tbr10-012	The use of commodity classifications codes must be supported. Examples of codes used are UNSPSC and eClass.
tbr10-013	Invoices commonly contain additional information about item attributes such as: sizes, colour etc.; when units with different attributes are not identified with unique product identifiers. This information is relevant when stocking items and comparing to deliveries. Additionally, depending on the nature of the item, the attribute may be used for automatically deriving account codes. For example; by defining phone numbers or meter number as attributes on an item the relevant cost centre can be identified.
tbr10-014	It must be possible to provide details of how a price of an item has been calculated. The information supported must include the list price and discount.
tbr10-015	It is considered to be common practice to show list prices and discounts on prices in invoices in order to assist with discounts and for verification of negotiated terms.
tbr10-033	To facilitate automation in matching invoices against orders (especially when orders are partially invoiced) it is necessary to identify the order line to which an invoice line relates.
tbr10-034	For the purpose of enabling matching against catalogue information, for enabling booking rules for repeated purchases, and for general reference to an item; the sellers item identifier must be supported on line level in the Invoice.
tbr10-041	By reference to the Order and its lines, the Invoice enables automated matching by the Customer via a workflow process.

Amounts

ID	Requirement
tbr10-017	The Invoice must support information needed to specify allowance and charges and their VAT details on document level in an invoice, e.g. for packing and shipping charges that apply to the invoice as a whole.
tbr10-019	An invoice must support reverse charge invoices which are those were the seller does not charge VAT in the invoice but instead the buyer settles the VAT according to the VAT rules that apply in the Member State where the supply takes place. EU directive 2006/112/EC, 194 – 199a.
tbr10-025	The calculation of an invoice total amount must show the relevant sums of lines, sum of VAT and the invoice totals with and without VAT. The invoice must also show what amount is due for payment. The interaction between the different totals must be defined to ensure that all cost is included in the invoice totals once and only once.
tbr10-026	It must be possible to issue an invoice that is paid with a financial transaction in a way that the value of the purchase is clearly stated at the same time and it is clear that no payment is due. Invoices can also be partially paid with deposits (e.g. in the case of down payments on orders) in which case the amount due for payment is less than the full amount of the purchase.
tbr10-027	In cases when invoices are issued in other currencies than the national currency of the seller, the seller may be required to provide information about the VAT total amount in his national currency.
tbr10-028	The Invoice must contain information about the currency of the invoice. The currency code for the invoice as a whole controls the rules that regulate which amounts in a Invoice must be in the same currency to make the calculation of the invoice totals possible.
tbr10-036	The use of rounding must be supported in the Invoice and the calculation rule for the invoice. Showing the rounding amount for invoice totals is common in some countries. Rounding amount of invoice total must remain optional.

Legal issues

ID	Requirement
tbr10-020	Invoices must support necessary information for Intra-community acquisition in accordance with EU directive 2006/112/EC, article 200.
tbr10-021	The Invoice is a commercial invoice. It is a le00gal requirement in some countries that the invoice document is specifically identified as being a commercial invoice, as opposed to other forms of invoices such as pro-forma, customs invoice etc. that serve a different purpose and are not valid as accounting documents or as claim for payment.
tbr10-022	Some countries have a legal requirement that an invoice party must be identified by using his national registry identifier (legal identity).
tbr10-023	If country of delivery is different from the sellers address it may affect the VAT jurisdiction for the invoice. An Invoice must therefore support information about the country of delivery.
tbr10-024	An invoice must support information needed to comply with the EU directive 2006/112/EC, article 226 which defines the required content of a VAT invoice. The following data requirements for VAT are identified in the article. (the text in this list is amended and shortened from the full text in the directive):. - The date of issue - A sequential number, based on one or more series, which uniquely identifies the invoice - The seller's VAT identification number

ID	Requirement
	- The buyer's VAT identification number (when the buyer is liable to pay the VAT) - The seller's and the buyers full name and address. - Quantity and nature of the goods or services supplied or the extent and nature of the services rendered. - The date of the supply or payment was made or completed if different from the date of invoice. - The taxable amount per rate or exemption, the unit price exclusive of VAT and any discounts or rebates if they are not included in the unit price. - The VAT rate applied. - The VAT amount payable, except where a special arrangement is applied under which, in accordance with the directive, such detail is excluded. - In the case of an exemption or where the customer is liable for payment of VAT, reference to the applicable provision of the directive.
tbr10-035	Statement of country of origin and related declarations in an Invoice allows the buyer and the seller to determine whether customs procedures and additional related information is required through other means. In accordance with EU customs regulations an “invoice declaration of origin” should include on each item line the country of origin of the product and a specific declaration in the document level textual note.
tbr10-038	A seller may need to state in the invoice what his registered status is. This information may affect how the buyer settles the payment. E.g. in some countries, if the seller is not registered as tax paying entity then the buyer is required to withhold the amount of the tax and pay it on behalf of the seller.
tbr10-039	The invoice, Corrective Invoice and Credit Note must comply with the commercial and fiscal requirements of the country where the Supplier is registered.
tbr10-040	An electronic Invoice or Corrective Invoice represents a legal claim for payment.

4 Profile detailed description

4.1 Business processes in scope

Procurement is a complex domain with several key processes, some of which are illustrated in the following figure.

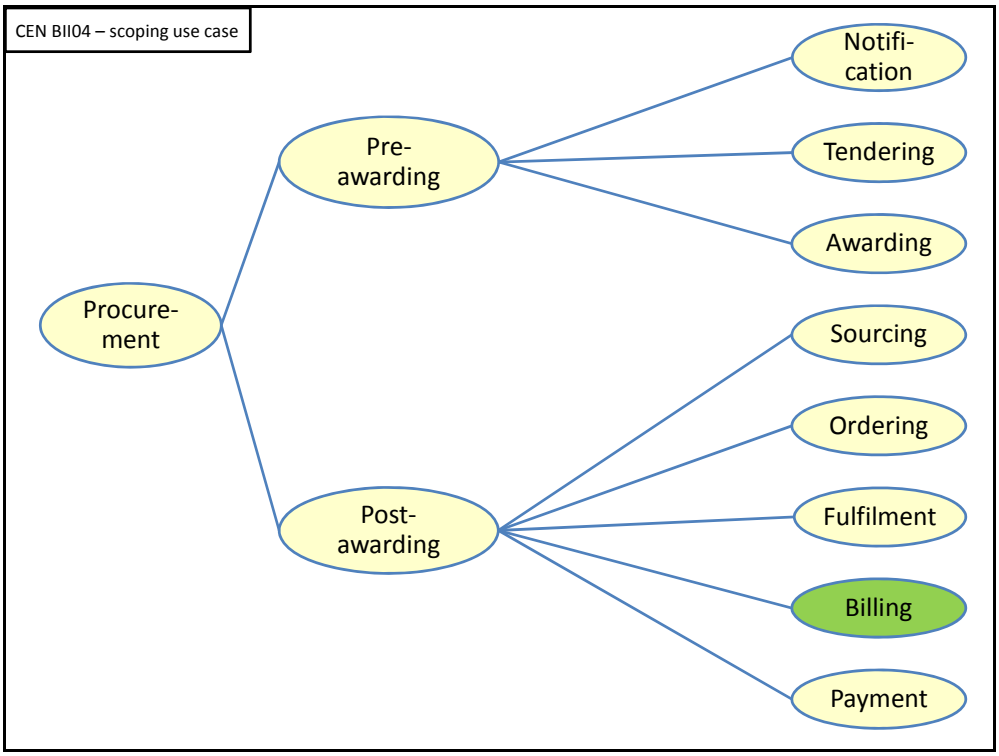

The Invoice Only profile covers the business processes as highlighted in the above figure.

4.2 Roles involved

The following business partners participate in this profile, acting in the roles as defined below.

Business partners	Description
Customer	The customer is the legal person or organization who is in demand of a product or service. Examples of customer roles: buyer, consignee, debtor, contracting authority.
Supplier	The supplier is the legal person or organization who provides a product or service. Examples of supplier roles: seller, consignor, creditor, economic operator.

Role/actor	Description
Creditor	One to whom a debt is owe. The Party that claims the payment and is responsible for resolving billing issues and arranging settlement. The Party that sends the Invoice. Also known as Invoice Issuer, Accounts Receivable, Seller.
Debtor	One who owes debt. The Party responsible for making settlement relating to a purchase. The Party that receives the Invoice. Also known as Invoicee, Accounts Payable, Buyer.

The following diagram links the business processes to the roles performed by the Business Partners.

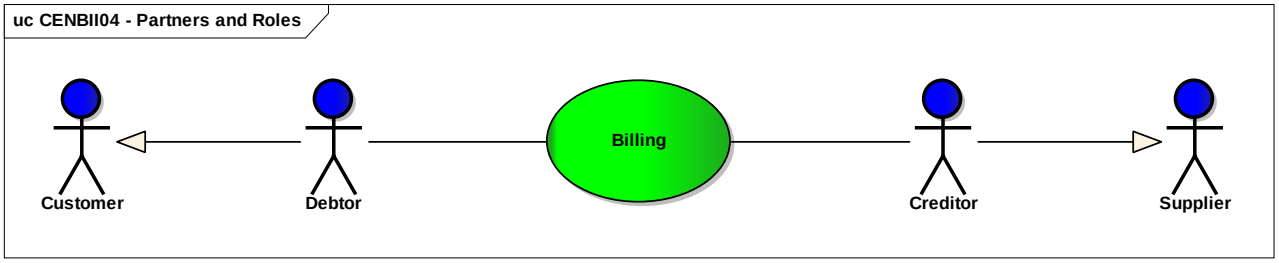

4.3 Billing Business Process

The following diagram shows the choreography of the business process implemented by the profile. The choreography of business collaborations defines the sequence of interactions when the profile is run within its context.

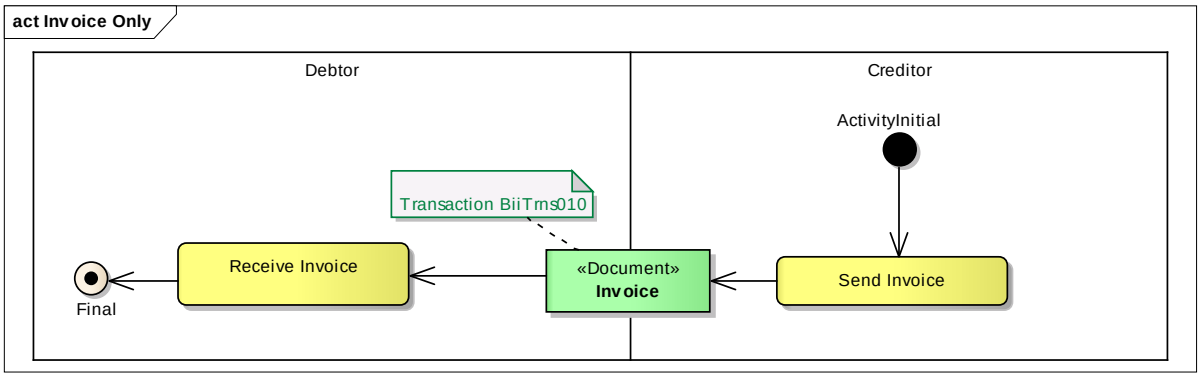

Categories	Description and Values
Description	The business process involves the Supplier and the Customer in the roles of Debtor and Creditor. The Creditor creates an Invoice that claims a payment for goods or services, and sends the Invoice to the Debtor. Upon receiving the Invoice the Debtor processes it but any response to the Creditor is handled with external processes that are not defined in this profile.
Pre-conditions	The Debtor and the Creditor have identified each other and a contract between the two or an Order exists. The Debtor has agreed to accept electronic Invoices that use this profile.
Post-conditions	The Debtor has received an invoice.
Remarks	Invoice disputes or rejections are handled externally.

4.4 Transaction information requirements

4.4.1 Invoice Transaction

Categories	Description and Values
Identifier	BiiTrns010
Description	The Creditor creates an Invoice that claims a payment for goods or services, and sends the Invoice to the Debtor.
Partner Types	Customer Supplier
Authorized Roles	Debtor Creditor
Legal Implications	See business rules below.
Constraints	See business rules below

4.4.1.1 Invoice Transaction Information Requirements Model

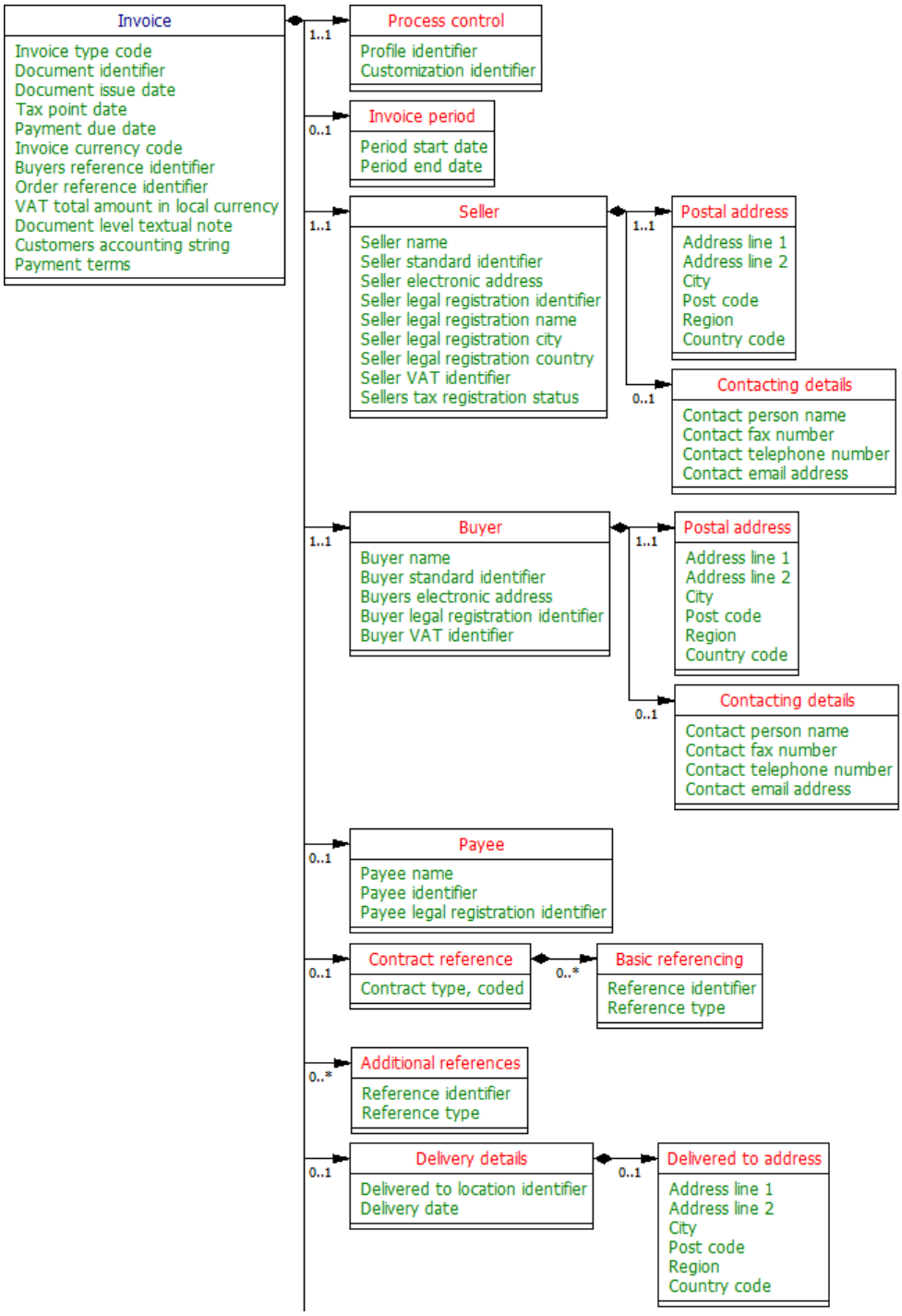

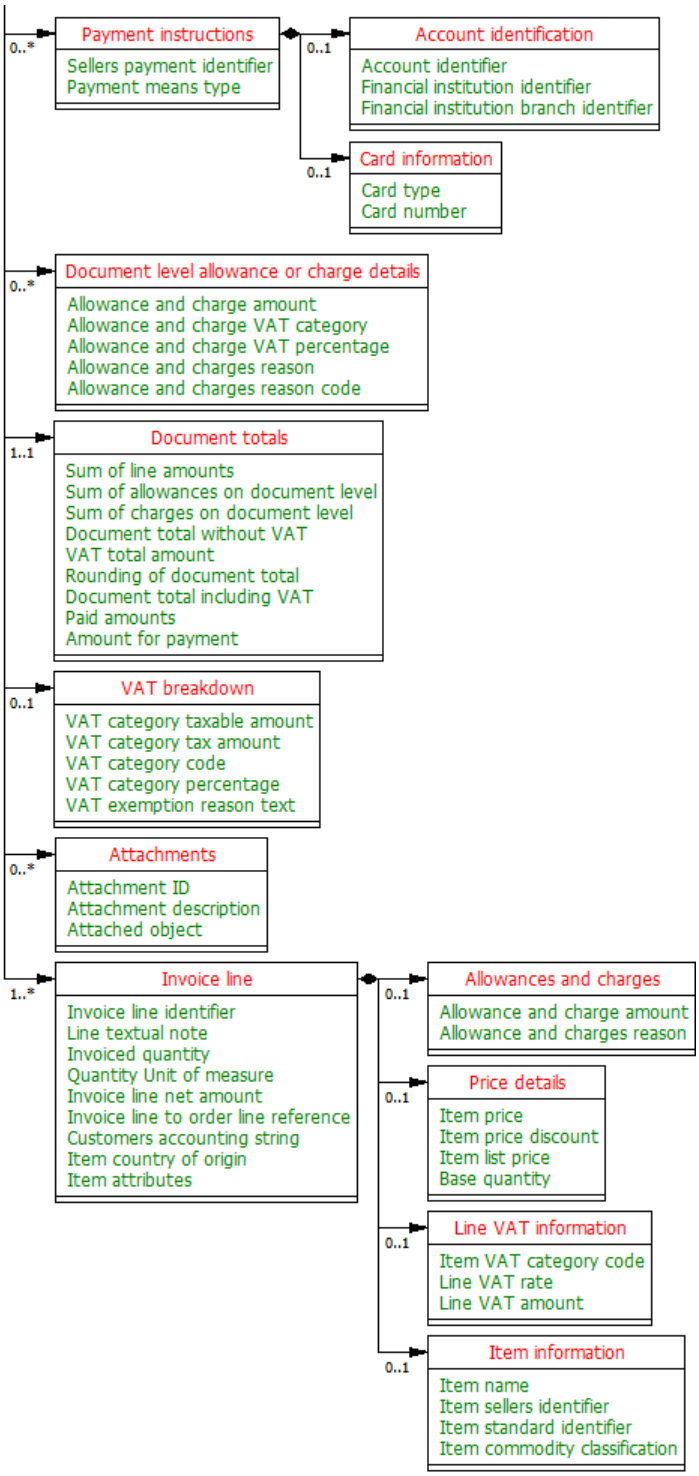
Payment instructions
Sellers payment identifier
Payment means type
0..*
0..1
Account identification
Account identifier
Financial institution identifier
Financial institution branch identifier
0..1
Card information
Card type
Card number
Document level allowance or charge details
Allowance and charge amount
Allowance and charge VAT category
Allowance and charge VAT percentage
Allowance and charges reason
Allowance and charges reason code
0..*
Document totals
Sum of line amounts
Sum of allowances on document level
Sum of charges on document level
Document total without VAT
VAT total amount
Rounding of document total
Document total including VAT
Paid amounts
Amount for payment
1..1
VAT breakdown
VAT category taxable amount
VAT category tax amount
VAT category code
VAT category percentage
VAT exemption reason text
0..1
Attachments
Attachment ID
Attachment description
Attached object
0..*
Invoice line
Invoice line identifier
Line textual note
Invoiced quantity
Quantity Unit of measure
Invoice line net amount
Invoice line to order line reference
Customers accounting string
Item country of origin
Item attributes
1..*
Allowances and charges
Allowance and charge amount
Allowance and charges reason
0..1
Price details
Item price
Item price discount
Item list price
Base quantity
0..1
Line VAT information
Item VAT category code
Line VAT rate
Line VAT amount
0..1
Item information
Item name
Item sellers identifier
Item standard identifier
Item commodity classification
0..1

4.4.1.2 Invoice Transaction Information Requirements

InfRqID	Crd	Tree and Business term	Usage	Data Type	ReqID	Note
		Invoice				
tir10-080	0..1	Invoice type code	A code that identifies the functional type of the invoice instance, such as commercial invoice, pro-forma invoice, final invoice. A code that identifies that the Core Invoice is a commercial invoice.	BiiDT::Code	tbr10-021	2
tir10-003	1..1	Document identifier	An invoice instance must contain an identifier. An invoice identifier enables positive referencing the document instance for various purposes including referencing between documents that are part of the same process.	BiiDT::Undefined	tbr10-024	
tir10-004	1..1	Document issue date	The issue date of an invoice is required by EU directives as well as country laws. A Core Invoice must therefore contain the date on which it was issued.	BiiDT::Date	tbr10-024	
tir10-006	0..1	Tax point date	The date applicable VAT	BiiDT::Date		
tir10-041	0..1	Payment due date	A Core Invoice may contain the date on which payment is due.	BiiDT::Date	tbr10-032	
tir10-007	1..1	Invoice currency code	The currency in which the monetary amounts are stated must be stated in the Core Invoice.	BiiDT::Code	tbr10-028	
tir10-082	0..1	Buyers reference identifier	When purchasing, a buyer may give a reference identifier to the seller and request the seller to state it on the invoice. The meaning of the reference may have no relevance for the seller and since it is issued by the buyer, who is the receiver of the invoice. Consequently it does not have to be qualified.	BiiDT::Undefined	tbr10-003	
tir10-011	0..1	Order reference identifier	To facilitate order–invoice matching a Core invoice may contain an identifier of an order (issued by the buyer) that the invoice relates to. A core invoice may only reference one order.	BiiDT::Undefined	tbr10-003	2
tir10-093	0..1	VAT total amount in local currency	A Core Invoice may, in cases when invoices are issued in currencies other than the national currency for VAT reporting, contain the VAT amount in the local currency.	BiiDT::Code	tbr10-027	
tir10-005	0..1	Document level textual note	The textual note provides the seller a means for providing unstructured information that is relevant to the invoice. This can be notes or other similar information that is not contained explicitly in another qualified element. Information given in as textual notes is mainly intended for manual processing. When “invoice clauses” or “declarations” are used they should be stated in full in the note element.	BiiDT::Text	tbr10-029, tbr10-035	3
tir10-008	0..1	Customers accounting string	The Core Invoice may contain a reference to the buyer's accounting code applied to the Core Invoice as a whole, expressed as text rather than a code in order to facilitate automation in booking into accounts following an order to invoice transformation.	BiiDT::Text	tbr10-008	
tir10-046	0..1	Payment terms	A Core Invoice may contain textual description of the payment terms that apply to the invoice due amount. E.g. penalty charges or intended collection procedures.	BiiDT::Text	tbr10-011	
	1..1	Process control	Information about the specification that apply to the transaction.	CENBII common structures::Process		

InfRqID	Crd	Tree and Business term	Usage	Data Type	ReqID	Note
				control		
tir10-002	1..1	Profile identifier	Identifies the BII profile or business process context in which the transaction appears. Identifying the profile or business process context in which the transaction appears enables the buyer to direct the message to an appropriate service as well as controlling its relation to other documents exchanged as part of the same process.	BiiDT::Code	tbr00-001 tbr10-001	
tir10-001	1..1	Customization identifier	Identifies the specification of content and rules that apply to the transaction. Identifying the customization/implementation guide/contextualization of the syntax message and its extension that applies to the invoice transaction, enables the receiver to apply the correct validation to the received document as well as to route the document to an appropriate service for processing.	BiiDT::Code	tbr00-002 tbr10-001	
	0..1	Invoice period	Dates that describe a period that has relevance in the context of the transaction. For invoices that charge for services or items delivered over a time period, such as subscriptions or metered services, a Core Invoice may contain information about the date period to which the invoice applies.	CENBII common structures::Date periods		
tir10-009	1..1	Period start date	The date on which the period starts. The start dates counts as part of the period. For invoices that charge for services or items delivered over a time period is necessary to be able to state the start date of the period for which the invoice relates such as for metered services and subscriptions.	BiiDT::Date	tbr10-024	
tir10-010	1..1	Period end date	The date on which the period ends. The end date counts as part of the period. It must be possible to state the end date of the period for which the invoice relates such as for metered services and subscriptions.	BiiDT::Date	tbr10-024	
	1..1	Seller		Main::Seller		
tir10-014	1..1	Seller name	A Core Invoice must contain the name of the seller.	BiiDT::Text	tbr10-024	
tir10-085	0..1	Seller standard identifier	A Core Invoice may contain a registered identifier for the seller. Information referenced by the identifier is not considered part of the message (i.e. the buyer is not required to look up the identifier in the relevant registry and process additional information)	BiiDT::Identifier	tbr10-005	1
tir10-097	0..1	Seller electronic address	A Core Invoice may contain the sellers electronic address. The address can be of any format and the format should be identified in the message.	BiiDT::Undefined	tbr10-037	
tir10-021	0..1	Seller legal registration identifier	A Core Invoice may contain the identifier assigned to the party by the national company registrar.	BiiDT::Identifier	tbr10-022	
tir10-108	0..1	Seller legal registration name		BiiDT::Text		
tir10-106	0..1	Seller legal registration city	The name of the city where the seller is legally registered.	BiiDT::Text		
tir10-109	0..1	Seller legal registration country		BiiDT::Code		

InfRqID	Crd	Tree and Business term	Usage	Data Type	ReqID	Note
tir10-020	0..1	Seller VAT identifier	When the Core Invoice is a VAT invoice it must state the sellers VAT registration number and tax scheme.	BiiDT::Identifier	tbr10-024	
tir10-098	0..1	Sellers tax registration status	A Core Invoice may contain a textual identifier or code that enables the seller to state his registered status for tax purposes.	BiiDT::Undefined	tbr10-038	
	0..1	Postal address	Address information.	CENBII common structures::Postal address		
tir10-015	0..1	Address line 1	The main address line in a postal address usually the street name and number. A Core Invoice must contain the seller's street name and number or P. O.box.	BiiDT::Undefined	tbr10-016, tbr10-024	
tir10-086	0..1	Address line 2	An additional address line in a postal address that can be used to give further details supplementing the main line. Common use are secondary house number in a complex or in a building. A Core Invoice may contain an additional address line for seller address.	BiiDT::Undefined	tbr10-016, tbr10-024	
tir10-016	0..1	City	The common name of the city where the postal address is. The name is written in full rather than as a code. A Core Invoice must contain the seller's city.	BiiDT::Undefined	tbr10-016, tbr10-024	
tir10-017	0..1	Post code	The identifier for an addressable group of properties according to the relevant national postal service, such as a ZIP code or Post Code. A Core Invoice may contain the seller's post code.	BiiDT::Undefined	tbr10-016, tbr10-024	
tir10-018	0..1	Region	For specifying a region, county, state, province etc. within a country by using text. In some countries regions or other type of country sub divisions are commonly used. A core invoice may contain that information.	BiiDT::Undefined	tbr10-016, tbr10-024	
tir10-019	0..1	Country code	The country where the address is. The country should always be given by using ISO code 3166 alpha 2 The seller's address country must be contained in a Core Invoice in the form of a two letter code (ISO 3166-1 alpha-2).	BiiDT::Code	tbr10-016, tbr10-024	
	0..1	Contacting details	Used to provide contacting information for a party in general or a person.	CENBII common structures::Contacting details		
tir10-025	0..1	Contact person name	The name of the contact person. A Core Invoice may contain a person name for a relevant contact at the seller.	BiiDT::Text	tbr10-007	
tir10-023	0..1	Contact fax number	A fax number for the contact persons. A Core Invoice may contain a tele-fax number for a relevant contact at the seller.	BiiDT::Undefined	tbr10-007	
tir10-022	0..1	Contact telephone number	A phone number for the contact person. If the person has a direct number, this is that number. A Core Invoice may contain a telephone number for a relevant contact at	BiiDT::Undefined	tbr10-007	

InfRqID	Crd	Tree and Business term	Usage	Data Type	ReqID	Note
			the seller.			
tir10-024	0..1	Contact email address	The e-mail address for the contact person. If the person has a direct e-mail this is that email. A Core Invoice may contain a telephone number for a relevant contact at the seller.	BiiDT::Undefined	tbr10-007	
	1..1	Buyer		Main::Buyer		
tir10-026	1..1	Buyer name	A Core Invoice must contain name of the buyer.	BiiDT::Text	tbr10-024	
tir10-087	0..1	Buyer standard identifier	A Core Invoice may contain a registered identifier for the buyer. Information referenced by the identifier is not considered part of the message (i.e. The buyer is not required to look up the identifier in the relevant registry and process additional information)	BiiDT::Identifier	tbr10-005	1
tir10-099	0..1	Buyers electronic address	A Core Invoice may contain the buyers electronic address. The address can be of any format and the format should be identified in the message.	BiiDT::Undefined	tbr10-037	
tir10-033	0..1	Buyer legal registration identifier	A Core Invoice may contain the identifier assigned to the Party by the national company registrar.	BiiDT::Identifier	tbr10-022	
tir10-032	0..1	Buyer VAT identifier	A Core Invoice may contain the buyers VAT identifier In order to facilitate reverse charge and intra community supply invoicing.	BiiDT::Identifier	tbr10-024	
	0..1	Postal address	Address information.	CENBII common structures::Postal address		
tir10-027	0..1	Address line 1	The main address line in a postal address usually the street name and number. A Core Invoice must contain the buyer's street name and number or P.O. box.	BiiDT::Undefined	tbr10-016, tbr10-024	
tir10-088	0..1	Address line 2	An additional address line in a postal address that can be used to give further details supplementing the main line. Common use are secondary house number in a complex or in a building. A Core Invoice may give an additional address line for buyer's address.	BiiDT::Undefined	tbr10-016, tbr10-024	
tir10-028	0..1	City	The common name of the city where the postal address is. The name is written in full rather than as a code. A Core Invoice must contain the buyer's city.	BiiDT::Undefined	tbr10-016, tbr10-024	
tir10-029	0..1	Post code	The identifier for an addressable group of properties according to the relevant national postal service, such as a ZIP code or Post Code. A Core Invoice may contain the buyer's post code.	BiiDT::Undefined	tbr10-016, tbr10-024	
tir10-030	0..1	Region	For specifying a region, county, state, province etc. within a country by using text. In some countries regions or other type of country sub divisions are commonly used. A Core Invoice may contain that information.	BiiDT::Undefined	tbr10-016, tbr10-024	
tir10-031	0..1	Country code	The country where the address is. The country should always be given by using ISO code 3166 alpha 2 The buyer's address country must be given in a Core Invoice in the form	BiiDT::Code	tbr10-016, tbr10-024	

InfRqID	Crd	Tree and Business term	Usage	Data Type	ReqID	Note
			of a two letter code (ISO 3166-1 alpha-2).			
	0..1	Contacting details	Used to provide contacting information for a party in general or a person.	CENBII common structures::Contacting details		
tir10-037	0..1	Contact person name	The name of the contact person. A Core Invoice may contain a person name for a relevant contact at the buyer.	BiiDT::Text	tbr10-007	
tir10-035	0..1	Contact fax number	A fax number for the contact persons. A Core Invoice may contain the tele-fax number for a relevant contact at the buyer.	BiiDT::Undefined	tbr10-007	
tir10-034	0..1	Contact telephone number	A phone number for the contact person. If the person has a direct number, this is that number. A Core Invoice may contain the telephone number for a relevant contact at the buyer.	BiiDT::Undefined	tbr10-007	
tir10-036	0..1	Contact email address	The e-mail address for the contact person. If the person has a direct e-mail this is that email. A Core Invoice may contain an e-mail address for a relevant contact at the buyer.	BiiDT::Undefined	tbr10-007	
	0..1	Payee		Main::Payee		
tir10-110	1..1	Payee name	The neame of the payee party.	BiiDT::Text		
tir10-111	0..1	Payee identifier	Used in absense of or in addition to the payee party name. Use and identifier known to the document recipient.	BiiDT::Identifier		
tir10-112	0..1	Payee legal registration identifier	An invoice may contain the identifier assigned to the payee by the national company registrar.	BiiDT::Identifier		
	0..1	Contract reference		Main::Contract reference		
tir10-084	0..1	Contract type, coded	A Core Invoice may contain the type of contract that is referred to (such as framework agreement) in a coded way to enable automated processing based on the contract type.	BiiDT::Code	tbr10-003	
	0..n	Basic referencing	A referece to a document or other source that can be positively identified.	CENBII common structures::Reference		
tir10-012	0..1	Reference identifier	Positive identification of the reference such as a unique identifier. To positively identify relevant contractual issues the invoice may contain an identifier of a contract that applies to the invoice.	BiiDT::Undefined	tbr10-003	
tir10-083	0..1	Reference type	The short description of what is reference such as contract type, document type , meter etc. A Core Invoice may contain the type of contract that is referred to (such as framework agreement)	BiiDT::Undefined	tbr10-003	
	0..n	Additional references	A referece to a document or other source that can be positively identified.	CENBII common structures::Reference		

InfRqID	Crd	Tree and Business term	Usage	Data Type	ReqID	Note
tir10-089	0..1	Reference identifier	Positive identification of the reference such as a unique identifier.	BiiDT::Undefined		
tir10-090	0..1	Reference type	The short description of what is reference such as contract type, document type , meter etc.	BiiDT::Undefined		
	0..1	Delivery details		Main::Delivery information		
tir10-100	0..1	Delivered to location identifier	A Core Invoice may contain an identifier for the location to which the items where delivered.	BiiDT::Identifier	tbr10-005	1
tir10-038	0..1	Delivery date	A Core Invoice may contain the actual delivery date on which goods or consignments are delivered from the seller. Also applicable for service completion date.	BiiDT::Date	tbr10-024	
	0..1	Delivered to address	Address information.	CENBII common structures::Postal address		
tir10-101	0..1	Address line 1	The main address line in a postal address usually the street name and number. A Core Invoice may contain the address to which the items where delivered.	BiiDT::Undefined	tbr10-018	
tir10-102	0..1	Address line 2	An additional address line in a postal address that can be used to give further details supplementing the main line. Common use are secondary house number in a complex or in a building. A Core Invoice may contain an additional address line in the delivered to address.	BiiDT::Undefined	tbr10-018	
tir10-103	0..1	City	The common name of the city where the postal address is. The name is written in full rather than as a code. A Core Invoice may contain the name of the city to which the items where delivered.	BiiDT::Undefined	tbr10-018	
tir10-104	0..1	Post code	The identifier for an addressable group of properties according to the relevant national postal service, such as a ZIP code or Post Code. A Core Invoice may contain the post code to which the items where delivered.	BiiDT::Undefined	tbr10-018	
tir10-105	0..1	Region	For specifying a region, county, state, province etc. within a country by using text. In some countries regions or other type of country sub divisions are commonly used. A Core Invoice may contain the country sub division to which the items where delivered.	BiiDT::Undefined	tbr10-018	
tir10-039	0..1	Country code	The country where the address is. The country should always be given by using ISO code 3166 alpha 2 Since delivery country may affect VAT issues A Core Invoice may contain the country to which the items were delivered.	BiiDT::Code	tbr10-018	
	0..n	Payment instructions		Main::Payment instructions		

InfRqID	Crd	Tree and Business term	Usage	Data Type	ReqID	Note
tir10-042	0..1	Sellers payment identifier	It must be possible to specify an identifier for the payment, issued by the seller as A Core Invoice may contain an identifier for the payment, issued by the seller as reference. Also known as end-to-end payment reference.	BiiDT::Undefined	tbr10-010	
tir10-040	0..1	Payment means type	A Core Invoice may contain an indication about how the payment should be handled.	BiiDT::Code	tbr10-009, tbr10-031	
	0..1	Account identification	Information for identifying an financial account.	CENBII common structures::Account identification		
tir10-043	1..1	Account identifier	The identifier for the account. Depending on circumstances the identifier can be in local format or standardized format such as IBAN. The identifier schema should be identified. To enable the buyer to issue a payment initiation to his bank the invoice may contain the identifier for the financial account either as IBAN or in proprietary format.	BiiDT::Identifier	tbr10-009, tbr10-030, tbr10-031	
tir10-045	0..1	Financial institution identifier	An identifier for the financial institution where the account is located, such as the BIC identifier (SWIFT code). A Core Invoice may contain the ISO 9362 BIC (Bank Identification Code) of a financial institution.	BiiDT::Identifier	tbr10-009, tbr10-031	
tir10-044	0..1	Financial institution branch identifier	The identifier for a branch or division of an organization may, in some countries, be used to positively identify the location of he account or supplement the financial institution identifier. The identifier for a branch or division of an organization may, in some countries, be used to positively identify the location of the account or supplement the financial institution identifier.	BiiDT::Undefined	tbr10-030	
	0..1	Card information		Main::Card information		
tir10-117	0..1	Card type		BiiDT::Text		
tir10-113	0..1	Card number		BiiDT::Text		
	0..n	Document level allowance or charge details	Allowance or charges that are added/deducted to a given amount	CENBII common structures:: Allowance-Charge in header		
tir10-047	1..1	Allowance and charge amount	The net amount of the allowance or the charge. For each allowance or charge a Core Invoice must contain the amount. Allowances are subtracted from the total invoice amount and charges are added to the amount. The amount is “net” without VAT.	BiiDT::Numeric	tbr10-017	
tir10-048	0..1	Allowance and charge VAT category	A code that identifies to what VAT subcategory the allowance or charge belongs to. A Core Invoice may contain information about one VAT category for each allowances and Charges on document level.	BiiDT::Undefined	tbr10-017	

InfRqID	Crd	Tree and Business term	Usage	Data Type	ReqID	Note
tir10-114	0..1	Allowance and charge VAT percentage		BiiDT::Numeric		
tir10-091	1..1	Allowance and charges reason	A textual reason for the allowance or the charge. Can also be its name. One textual description of what is being added or deducted. E.g. „volume discount" or "packing charges" must be stated for each allowance and charge on document level in a Core Invoice.	BiiDT::Undefined	tbr10-017	
tir10-092	0..1	Allowance and charges reason code	A coded specification of what the allowance or charge is. A Core Invoice may contain a coded description of what is being added or deducted. E.g. „volume discount" or "packing charges", for each allowance or charge.	BiiDT::Undefined	tbr10-017	
	1..1	Document totals	The calcuated totals of the document.	CENBII common structures::Document totals		
tir10-054	1..1	Sum of line amounts	Sum of line amounts in the document. A Core Invoice must contain the sum of all line amounts. The amount must be exclusive of VAT but inclusive of allowances or charges applied to the lines as well as taxes, other than VAT.	BiiDT::Numeric	tbr10-025	
tir10-057	0..1	Sum of allowances on document level	Sum of all allowances on header level in the document. Allowances on line level are included in the line amount and summed up into the "sum of line amounts" A Core Invoice may contain the total amount of all allowances given on document level. Line allowances are included in the net line amount.	BiiDT::Numeric	tbr10-025	
tir10-058	0..1	Sum of charges on document level	Sum of all charge on header level in the document. Charges on line level are included in the line amount and summed up into the "sum of line amounts" A Core Invoice may contain the total amount of all charges given on document level. Line charges are included in the net line amount.	BiiDT::Numeric	tbr10-025	
tir10-055	1..1	Document total without VAT	The "Sum of line amounts" plus "sum of allowances on document level" plus "sum of charges on document level". A Core Invoice must contain the total amount of the invoice, including document level allowances and charges but exclusive of VAT.	BiiDT::Numeric	tbr10-025	
tir10-049	0..1	VAT total amount	The total VAT amount that is "added to the document total w/o VAT". This is the sum of all VAT subcategory amounts. A Core Invoice may contain the total VAT amount. This amount is the sum of each sub total for each VAT rate.	BiiDT::Numeric	tbr10-024	
tir10-060	0..1	Rounding of document total	Any rounding of the "Document total including VAT" A Core Invoice may contain the rounding amount (positive or negative) added to the invoice to produce a rounded invoice total.	BiiDT::Numeric	tbr10-025, tbr10-036	
tir10-056	1..1	Document total including VAT	The total value including VAT A Core Invoice must contain the total amount of the invoice inclusive VAT. I.e. the total value of the purchase irrespective of payment status.	BiiDT::Numeric	tbr10-025, tbr10-026	
tir10-059	0..1	Paid amounts	Any amounts that have been paid a-priory.	BiiDT::Numeric	tbr10-025,	

InfRqID	Crd	Tree and Business term	Usage	Data Type	ReqID	Note
			A Core Invoice may contain the sum of all prepaid amounts that must be deducted from the payment of this invoice. For fully paid invoices (cash or card) this amount equals the invoice total.		tbr10-026	
tir10-061	1..1	Amount for payment	The amount that is expected to be paid based on the document. This amount is the "Document total including VAT" less the "paid amounts" that have been paid a-priori. A Core Invoice must contain the total amount to be paid that is due. If the invoice is fully paid i.e. cash or card, the due amount for the invoice is zero.	BiiDT::Numeric	tbr10-025, tbr10-026	
	0..1	VAT breakdown	Information about VAT subtotals A Core Invoice may be a VAT invoice in which case it must contain certain information details for each VAT rate and exemption, identified with a category code in a Core Invoice.	CENBII common structures::VAT subtotals		
tir10-050	1..1	VAT category taxable amount	The amount that is the base for the VAT rate applied in the subcategory. For each VAT category a Core invoice must contain the amount to which VAT percent (rate) is applied to calculate the VAT sub total amount for that category.	BiiDT::Numeric	tbr10-024	
tir10-051	1..1	VAT category tax amount	The calculated amount of the tax derived by multiplying the taxable amount with the tax percentage. For each VAT category a Core Invoice must contain the amount of VAT for that category.	BiiDT::Numeric	tbr10-024	
tir10-052	1..1	VAT category code	A code that uniquelly identifies each subtotal within the transaction. Each VAT category a Core Invoice must be identified with a code.	BiiDT::Code	tbr10-024	
tir10-096	1..1	VAT category percentage	The tax rate that is to be applied to the taxable amount in order to derive the tax amount. For each VAT category a Core Invoice must contain the VAT percentage for each sub total taxable amount so that it can be used to calculate the VAT amount. Where VAT category code is stated then VAT category percentage must also be stated.	BiiDT::Numeric	tbr10-024	
tir10-053	0..1	VAT exemption reason text	A textual description of the reason why the items belongin to the subtotal are exempted for VAT. A Core Invoice may contain, as text, the reasons for why a value amount in a category is exempted from VAT. Core Invoices only support one category with an exemption reason pr. Invoice.	BiiDT::Undefined	tbr10-024	
	0..n	Attachments	Attached documents	CENBII common structures:: Attachment		
tir10-081	0..1	Attachment ID	A positive identification of the relvant document, such as an unique identifier.	BiiDT::Undefined		
tir10-079	0..1	Attachment description	A short description of the document type.	BiiDT::Text		
tir10-013	0..1	Attached object	The attached document embeded as binary object.	BiiDT::Binary Object	tbr10-004	

InfRqID	Crd	Tree and Business term	Usage	Data Type	ReqID	Note
			A Core Invoice may contain an attached electronic document as an encoded object in the invoice in order to provide supporting documents such as timesheets, usages reports etc. The seller can only expect the receiver to process attachments according to rule.			
	1..n	Invoice line		Main::Invoice line		
tir10-062	1..1	Invoice line identifier	Each line in a Core invoice must contain an identifier that is unique within the document to make it possible to reference the line. For example, from other documents like credit notes and in disputes.	BiiDT::Undefined	tbr10-002	
tir10-063	0..1	Line textual note	Each line in a Core Invoice may contain a free-form text. This element may contain notes or any other similar information that is not contained explicitly in another structure. Clauses or declarations that refer to a particular line should be entered in full as notes.	BiiDT::Text	tbr10-029	
tir10-064	1..1	Invoiced quantity	Each line in a Core Invoice must contain the invoiced quantity. The quantity may be negative e.g. in case of returns.	BiiDT::Numeric	tbr10-024	
tir10-094	1..1	Quantity Unit of measure	Each line in a Core Invoice must contain the unit of measure that applies to the invoiced quantity.	BiiDT::Code	tbr10-024	
tir10-065	1..1	Invoice line net amount	Each line in a Core Invoice must contain the total amount of the line. The amount is “net” without VAT, i.e. inclusive of line level allowances and charges as well as relevant taxes, except VAT which must be excluded from the amount.	BiiDT::Amount	tbr10-025	
tir10-066	0..1	Invoice line to order line reference	Each line in a Core Invoice may contain a reference to the relevant order line in the order that is identified on the document level in the invoice.	BiiDT::Undefined	tbr10-033	2
tir10-107	0..1	Customers accounting string	The Core Invoice may contain a reference to the buyer's accounting code applicaple to the specific line, expressed as text rather than a code in order to facilitate automation in booking into accounts following an order to invoice transformation.	BiiDT::Text		
tir10-095	0..1	Item country of origin	Each line in a Core Invoice may contain the items country of origin. When relevant this allows the buyer to identify whether further customs procedures are required.	BiiDT::Code	tbr10-035	
tir10-073	0..1	Item attributes	Each line in a Core Invoice may contain attribute for the item. For example colour, size, meter numbers. This information supports automatically assigning accounting codes and matching to orders and receiving documents. Description of additional data.	BiiDT::Undefined	tbr10-013	
	0..1	Allowances and charges	Allowance or charges that are added/deducted to a given amount	CENBII common structures:: Allowances and charges		
tir10-067	1..1	Allowance and charge amount	The net amount of the allowance or the charge exluding VAT.	BiiDT::Numeric		
tir10-078	1..1	Allowance and charges reason	A textual reason for the allowance or the charge. Can also be its name.	BiiDT::Undefined		
	0..1	Price details	The price of an item and its discounts.	Main::Price details		

InfRqID	Crd	Tree and Business term	Usage	Data Type	ReqID	Note
tir10-075	0..1	Item price	Each line in a Core Invoice may contain the net price of the item including all allowances or charges that directly relates to price (e.g. discount), and taxes but excluding VAT. The net price of an item including discounts or surcharges that apply to the price.	BiiDT::Numeric	tbr10-014, tbr10-024	
tir10-076	0..1	Item price discount	The total discount subtracted from the gross price to reach the net price. Each line in a Core Invoice may contain the amount of the price discount. The price discount amount is informative.	BiiDT::Numeric	tbr10-014, tbr10-015	
tir10-077	0..1	Item list price	The gross price of the item before subtracting discounts. E.g. list price. Each line in a Core Invoice may contain the gross price, e.g. List price for the item. The gross price of the item before subtracting discounts. E.g. list price.	BiiDT::Numeric	tbr10-014, tbr10-015	
tir10-074	0..1	Base quantity	The number of invoiced quantity units for which the price is stated. E.g. Invoiced quantity is 1000 LTR, price is €15 pr. 10 LTR.	BiiDT::Numeric		
	0..1	Line VAT information		Main::Line VAT information		
tir10-072	0..1	Item VAT category code	Each line in a Core Invoice may contain the VAT category/rate used for this invoice line. The category code acts as a key for summing up line amounts pr. VAT category as well for relating the VAT category percentage given on document level, to the line. If the invoice is a VAT invoice each line must contain a category code.	BiiDT::Undefined	tbr10-025	
tir10-115	0..1	Line VAT rate	The VAT percentage rate that applies to the invoice line as whole.	BiiDT::Text		
tir10-116	0..1	Line VAT amount	The VAT amount for the invoice line. Calculated as a multiple of line amount and line VAT rate	BiiDT::Numeric		
	0..1	Item information	Information about an item.	Main::Item information		
tir10-068	0..1	Item name	A short name for an item. Each line in a Core Invoice must contain the name of the invoiced item.	BiiDT::Text	tbr10-024	
tir10-069	0..1	Item sellers identifier	The sellers identifier for the item. Each line in a Core Invoice may contain the seller's identifier for an item.	BiiDT::Undefined	tbr10-034	
tir10-070	0..1	Item standard identifier	A item identifier based on a registered schema. Each line in a Core Invoice may contain a registered item identifier.	BiiDT::Identifier	tbr10-006	
tir10-071	0..2	Item commodity classification	A classification code for classifying the item by its type or nature. Each line in a Core Invoice must contain classification codes used to classify the type or nature of the Item. The seller can only expect the buyer to acknowledge two classifications. Allowing for the use of a general classification code such as UNSPSC and a specific one such as CPV in the same line.	BiiDT::Code	tbr10-012	

4.4.1.3 Invoice Transaction Business Rules

Facts

RuleID	rulenote	target	errorlevel	source	ReqID
BII2-T10-R031	An invoice period end date MUST be later or equal to an invoice period start date	Invoice Period	fatal	T10	
BII2-T10-R032	A scheme identifier for the invoice line item registered identifier MUST be provided if invoice line item registered identifiers are used to identify a product.(e.g. GTIN)	Invoice Line	fatal	T10	Tbr10-005
BII2-T10-R033	A scheme identifier for a invoice line item commodity classification MUST be provided if invoice line item commodity classification are used to classify an invoice line item (e.g. CPV or UNSPSC)	Invoice Line	fatal	T10	Tbr10-012
BII2-T10-R034	Invoice line item net price MUST NOT be negative	Invoice Line	fatal	T10	Tbr10-014
BII2-T10-R035	Invoice total with VAT MUST NOT be negative	Invoice	fatal	T10	
BII2-T10-R037	Amount due for payment in an invoice MUST NOT be negative	Invoice	fatal	T10	
BII2-T10-R038	A document level allowance or charge amount MUST NOT be negative	Document level Allowance or Charge	fatal	T10	

Integrity constraints

RuleID	rulenote	target	errorlevel	source	ReqID
BII2-T10-R001	An invoice MUST have a customization identifier	Invoice	fatal	T10	Tbr10-001
BII2-T10-R002	An invoice MUST have a business process identifier	Invoice	fatal	T10	Tbr10-001
BII2-T10-R003	An invoice MUST have an invoice identifier	Invoice	fatal	T10	Tbr10-024
BII2-T10-R004	An invoice MUST have an invoice issue date	Invoice	fatal	T10	Tbr10-024
BII2-T10-R005	An invoice MUST specify the currency code for the document	Invoice	fatal	T10	Tbr10-028
BII2-T10-R006	An invoice MUST have a seller name and/or a seller identifier	Invoice	fatal	T10	Tbr10-005 Tbr10-024

BII2-T10-R008	An invoice MUST have a buyer name and/or a buyer identifier	Invoice	fatal	T10	Tbr10-005 Tbr10-024
BII2-T10-R010	An invoice MUST have the sum of line amounts	Invoice	fatal	T10	Tbr10-024
BII2-T10-R011	An invoice MUST have the invoice total without VAT	Invoice	fatal	T10	Tbr10-024
BII2-T10-R012	An invoice MUST have the invoice total with VAT (value of purchase)	Invoice	fatal	T10	Tbr10-026
BII2-T10-R013	An invoice MUST have the amount due for payment	Invoice	fatal	T10	Tbr10-026
BII2-T10-R014	An invoice MUST have at least one invoice line	Invoice	fatal	T10	Tbr10-024
BII2-T10-R015	An invoice MUST specify the VAT total amount, if there are VAT line amounts	Invoice	fatal	T10	Tbr10-024
BII2-T10-R017	Each invoice line MUST have an invoice line identifier	Invoice Line	fatal	T10	Tbr10-002
BII2-T10-R018	Each invoice line MUST have an invoiced quantity	Invoice Line	fatal	T10	Tbr10-024
BII2-T10-R019	Each invoice line MUST have a quantity unit of measure	Invoice Line	fatal	T10	Tbr10-024
BII2-T10-R020	Each invoice line MUST have an invoice line net amount	Invoice Line	fatal	T10	Tbr10-024
BII2-T10-R021	Each invoice line MUST have an invoice line item name and/or the invoice line item identifier	Invoice Line	fatal	T10	Tbr10-006
BII2-T10-R023	Each invoice period information MUST have an invoice period start date	Invoice Period Information	fatal	T10	
BII2-T10-R024	Each invoice period information MUST have an invoice period end date	Invoice Period Information	fatal	T10	
BII2-T10-R025	Each document level allowance or charge details MUST have an allowance and charge reason text	Allowance Charge	fatal	T10	Tbr10-024
BII2-T10-R026	An invoice MUST contain VAT category details	Invoice	fatal	T10	Tbr10-024
BII2-T10-R027	Each VAT category details MUST have a VAT category taxable amount	VAT category	fatal	T10	Tbr10-024

BII2-T10-R028	Each VAT category details MUST have a VAT category tax amount	VAT category	fatal	T10	Tbr10-024
BII2-T10-R029	Every VAT category details MUST be defined through a VAT category code	VAT category	fatal	T10	Tbr10-024
BII2-T10-R030	The VAT category percentage MUST be provided if the VAT category code is standard.	VAT category	fatal	T10	Tbr10-024
BII2-T10-R041	A payment means MUST specify the payment means type	Payment Means	fatal	T10	Tbr10-009

Calculations

RuleID	rulenote	target	errorlevel	source	ReqID
BII2-T10-R051	Sum of line amounts MUST equal the invoice line net amounts	Invoice	fatal	T10	Tbr10-025
BII2-T10-R052	An invoice total without VAT MUST equal the sum of line amounts plus the sum of charges on document level minus the sum of allowances on document level	Invoice	fatal	T10	Tbr10-025
BII2-T10-R053	An invoice total with VAT MUST equal the invoice total without VAT plus the VAT total amount and the rounding of invoice total	Invoice	fatal	T10	Tbr10-036
BII2-T10-R054	The sum of allowances at document level MUST be equal to the sum of document level allowance amounts	Invoice	fatal	T10	Tbr10-025
BII2-T10-R055	The sum of charges at document level MUST be equal to the sum of document level charge amounts	Invoice	fatal	T10	Tbr10-025
BII2-T10-R056	Amount due for payment MUST be equal to the invoice total amount with VAT minus the paid amounts	Invoice	fatal	T10	Tbr10-025
BII2-T10-R057	Each invoice line net amount MUST be equal to the invoice line item net price amount multiplied by the invoiced quantity at line level plus charges minus allowances at line level	Invoice Line	fatal	T10	
BII2-T10-R058	Invoice total without VAT MUST be equal to the sum of VAT category taxable amounts	Invoice	fatal	T10	Tbr10-025

Conditions

RuleID	rulenote	target	errorlevel	source	ReqID
BII2-T10-R039	An account identifier MUST be present if payment means type is funds transfer	Payment Means	fatal	T10	Tbr10-009
BII2-T10-R040	A sellers financial institution identifier MUST be provided if the scheme of the account identifier is IBAN and the payment means is international bank transfer	Payment Means	fatal	T10	Tbr10-030

BII2-T10-R042	A sellers financial institution identifier scheme MUST be BIC if the scheme of the account identifier is IBAN and the payment means type is international account transfer	Payment Means	fatal	T10	Tbr10-030
BII2-T10-R043	Document level allowances and charges details MUST have allowance and charge VAT category if the invoice has a VAT total amount	Allowance Charge	fatal	T10	Tbr10-017
BII2-T10-R044	A seller VAT identifier MUST be provided if the invoice has a VAT total amount	Invoice	fatal	T10	Tbr10-024
BII2-T10-R045	A VAT exemption reason text or a VAT exemption reason code MUST be provided if the VAT category code is exempt.	VAT category	fatal	T10	Tbr10-024
BII2-T10-R046	Each invoice line MUST be categorized with the invoice line VAT category if the invoice has a VAT total amount	Invoice Line	fatal	T10	Tbr10-024
BII2-T10-R047	A buyer VAT identifier MUST be present if the VAT category code is reverse VAT	Invoice	fatal	T10	Tbr10-19
BII2-T10-R048	An invoice with a VAT category code of reverse charge MUST NOT contain other VAT categories.	VAT category	fatal	T10	Tbr10-19
BII2-T10-R049	The invoice total without VAT MUST be equal to the VAT category taxable amount if the VAT category code is reverse charge	Invoice	fatal	T10	Tbr10-19
BII2-T10-R050	The VAT category tax amount MUST be zero if the VAT category code is reverse charge (since there is only one VAT category allowed it follows that the invoice tax total for reverse charge invoices is zero)	Invoice	fatal	T10	Tbr10-19

5 Implementation

The following documents define the binding of the transactions to various syntaxes:

Transaction	Syntax	Binding document
BiiTrns010	UN/CEFACT D11A	BiiTrns10-SB-Cefact.rtf
BiiTrns010	UBL 2.1	BiiTrns10-SB-UBL.rtf

These documents have been annexed to this profile.

Validation tools, such as Schematron files, are available on the BII2 web site: http://www.cenbii.eu/

6 References

6.1 General references relevant for all BII profiles

External documents

- UN/CEFACT Modelling Methodology (available at http://www.untmg.org/specifications/)
- UML (Unified Modelling Language), version 2.0 (available at http://www.omg.org/spec/UML/2.0/)

Related publications from CEN/ISSS WS/BII:

- CEN CWA 16073:2010 – BII1 Profiles and deliverables
- CEN CWA xxxx0: BII2 Architecture
- CEN CWA xxxx1, BII2 eNotification profile
- CEN CWA xxxx2, BII2 eTendering profiles
- CEN CWA xxxx3, BII2 eCatalogue profiles

BII2 web site: http://www.cenbii.eu/